CONCRETE RING
FOR THE MANHOLE
DN 630

Made off vibro compacting high quality concrete **C35/45 (MB45)**

RELIEF RING FOR
DN 630

EXTENSION
DN 630 OD

GROOVE
for metal cover

MANHOLE BASE
PP injected base
DN 630

QUICK AND SIMPLE INSTALLATION

Technical drawing

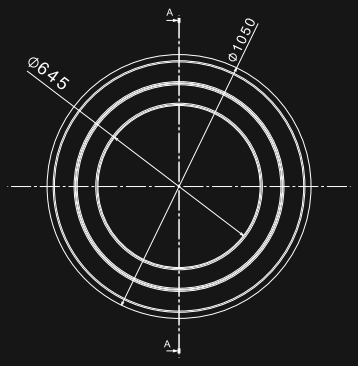

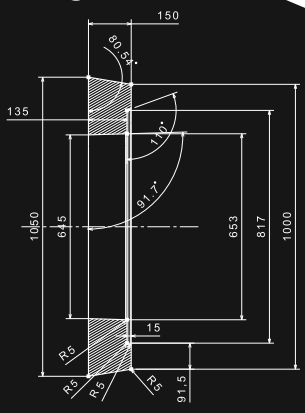

Relief ring for manholes DN 630 enables their installation even in the zones with heavier traffic. Groove for metal cover allows installation of cast iron covers of larger load classes.